Engineering Change Request Form
(FRM-ENG-ECR-100)

INSTRUCTIONS ON FORM USE

This form is for use in the engineering change request process. To ensure that the engineering department has accurately captured and documented all required changes needed on the drawing(s), all departments are required to review the attached drawings. While reviewing, each department will be required to fill out their respective sections in Sharepoint.

DRAWING INFORMATION

UPSCO #: UAMP-00003587 Revision: D03

Description: CG, MP-PF, # 3700-0335, 45LT, 425/630

Customer Name: Corning Natural Gas, Corp (CG) Customer Part Number: _____

Author: Anthony Fiorille

	PART #	OLD PART #	CATEGORY	TYPE	DESCRIPTION	QTY.
1	UCVA-00001585	U02054	Component Part	Valve	3/4" H11179171-250 INS LW	1
2	UCNP-00003791	U06009	Component Part	Nipple	3/4" S40 x 12", TBE	1
3	UCRG-00007400		Component Part	Regulator	HSR 3/4" x 1" NPT Orif: 1/8", Spring: Yellow, Set Point: 7" WC	1
4	UFBD-00000502	U05210	Fabricated Part	Bend	1 1/4" S40 x 6" x 6" SWTO 1" S40, TBE	1
5	UCMB-00002407	U03003	Component Part	Meter Bar	6640-CCE, 1 1/4" NPT x 1 1/4" NPT x 1 1/4" NPT	1
6	UCSW-00001532	U04004	Component Part	Swivel	1 1/4" NPT x 45LT, BMI, Offset	2
7	UCSN-00000903	U04026	Component Part	Swivel Nut	45LT, BMI	2
8	UCGK-00000527	U04040	Component Part	Gasket	45LT	2
9	USCP-00000828	U08013	Shipping-Packaging Part	Caplug	BP-1-7/8, 45LT Nut, OUTSIDE	2
10	USCP-00000821	U08005	Shipping-Packaging Part	Caplug	W-17, 1 1/4" NPT, INSIDE	1
11	USCP-00000014	U08024	Shipping-Packaging Part	Caplug	T-12X/REUSER, 3/4" NPT, INSIDE	1
12	USLB-00000922	U12090	Shipping-Packaging Part	Label	1 1/2" x 7/8", Fabrication Sticker	1
13	USLB-00003933	U01105	Shipping-Packaging Part	Label	4" x 5", Box Label	.100
14	USLI-00000932	U09041	Shipping-Packaging Part	Liner	Flange Tube - 48" x 40" x 31"	.050
15	USIN-00000933	U09052	Shipping-Packaging Part	Insert	For Flange Tube Liner	.500
16	USPL-00000367	U10014	Shipping-Packaging Part	Pallet	YRM-3, 4-Way, 40" x 48"	.050

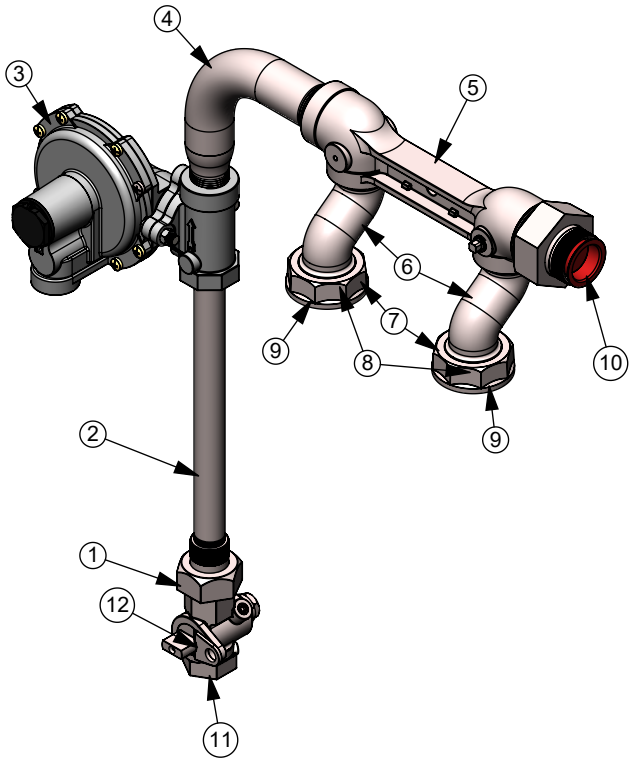

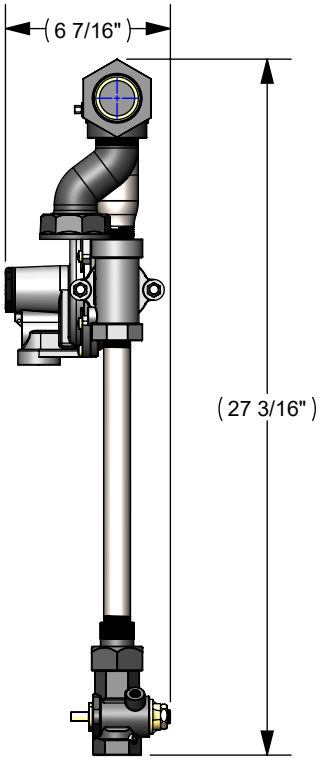

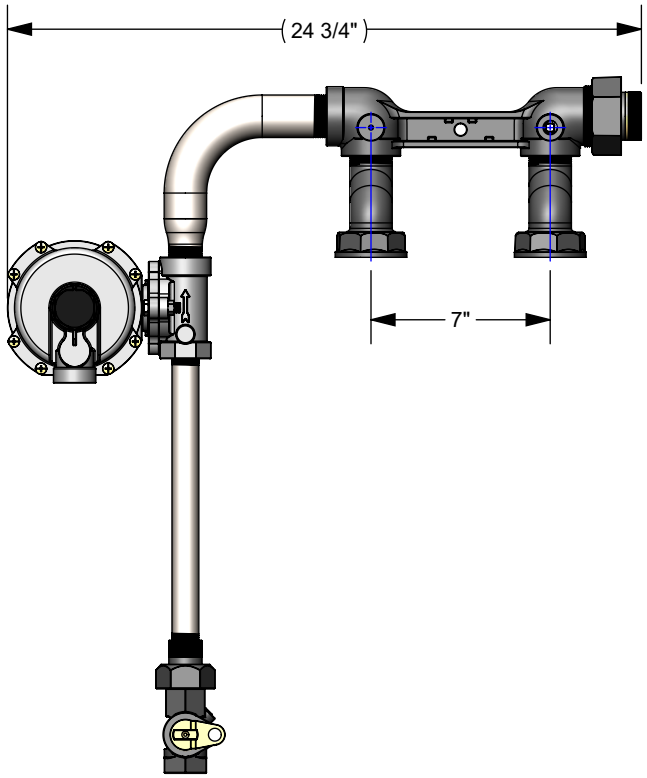

Rev	Change Description	Date
D03	Added customer pn to description.	8/30/2022
P02	Revised drawing format.	02/15/2021

UPSCO INC
PO Box 431 - 67 Central St
Moravia, NY 13118
P: 315.497.1070
F: 315.497.0223
WWW.UPSCOINC.COM

UPSCO #: UAMP-00003587 ()
Description: CG, MP-PF, # 3700-0335, 45LT, 425/630
Customer: Corning Natural Gas, Corp (CG)

Drawing Type: Production
Product Type: Assembly - MP Prefab
Drawing Date: 11/20/2018
Drawing Rev. D03

Pipe Dope: Rector Seal Special #5
Test Pressure: 1 Min @ 90 PSI
Manometer: N/A
Page Number: 1 of 1

Primer: Alkyd, Blue
Paint: Alkyd, ASA #49 Grey
Packaging: 20 per Liner / 1 Liner per Pallet
Drawing Author: Anthony Fiorille

TOLERANCES
FRACTIONS 1/8" ANGLES 1
BREAK AND DEBURR ALL SHARP EDGES

Copyright 2021 ~ Utility Products Specialists Company Inc.
UPSCO Incorporated claims propriety rights to the materials disclosed herein. This material is disclosed in confidence and may not be reproduced or used to manufacture anything or referred to herein, without the direct written permission of UPSCO Incorporated. In consideration of the use of this drawing, user agrees that it shall be treated as confidential material, that it shall be returned upon request, and if the contents thereof shall not be disposed of directly or indirectly, nor shall it be used for any purpose other than forwhich it was specifically furnished, except by written permission of UPSCO Incorporated.