Engineering Change Request Form
(FRM-ENG-ECR-100)

INSTRUCTIONS ON FORM USE

This form is for use in the engineering change request process. To ensure that the engineering department has accurately captured and documented all required changes needed on the drawing(s), all departments are required to review the attached drawings. While reviewing, each department will be required to fill out their respective sections in Sharepoint.

DRAWING INFORMATION

UPSCO #: UAMP-00010260 Revision: D03

Description: CG, # 0100-0704, MP-PF 1" ITRON

Customer Name: Corning Natural Gas, Corp (CG) Customer Part Number: _____

Author: Anthony Fiorille

	PART #	OLD PART #	CATEGORY	TYPE	DESCRIPTION	QTY.	COMMENT
1	UCVA-00001356	U02506	Component Part	Valve	1", H11179, 175# INS LW, 1/8" TEST PORT	1	
2	UCNP-00000036	U06018	Component Part	Nipple	1" S40 x 6", TBE	1	
3	UCRG-00010316		Component Part	Regulator	B42R, 1" X 1" NPT, 1/8" ORI	1	ALT: UCRG-00010315
4	UCBD-00002056	U05063	Component Part	Bend	1" S40 x 5" x 5", TBE, 2" R	1	ALT: UFBD-00002059
5	UCMB-00002336	U03097	Component Part	Meter Bar	6610-FCE, 1" x 1" x 3/4" NPT, 1/4" PLUG	1	
6	UCSW-00003577		Component Part	Swivel	3/4" NPT x 1A, BMI, Offset	2	
7	UCGK-00000524	U04037	Component Part	Gasket	1A	2	
8	UCSN-00000900	U04023	Component Part	Swivel Nut	#1 Pitts, BMI	2	
9	USCP-00000844	U08037	Shipping-Packaging Part	Caplug	BP-1-1/4, 1A Nut, INSIDE	2	
10	USCP-00000013	U08001	Shipping-Packaging Part	Caplug	T-14, 1" NPT, INSIDE	2	
11	USLB-00000922	U12090	Shipping-Packaging Part	Label	1 1/2" x 7/8", Fabrication Sticker	1	Apply After Paint
12	USLB-00003933	U01105	Shipping-Packaging Part	Label	4" x 5", Box Label	.500	
13	USBX-00010175		Shipping-Packaging Part	Box	24 1/2" x 22" x 8", 48 ECT. D.W. RSC	.500	
14	USPL-00002194	U10008	Shipping-Packaging Part	Pallet	PALLET CLP 41" x 46"	.025	

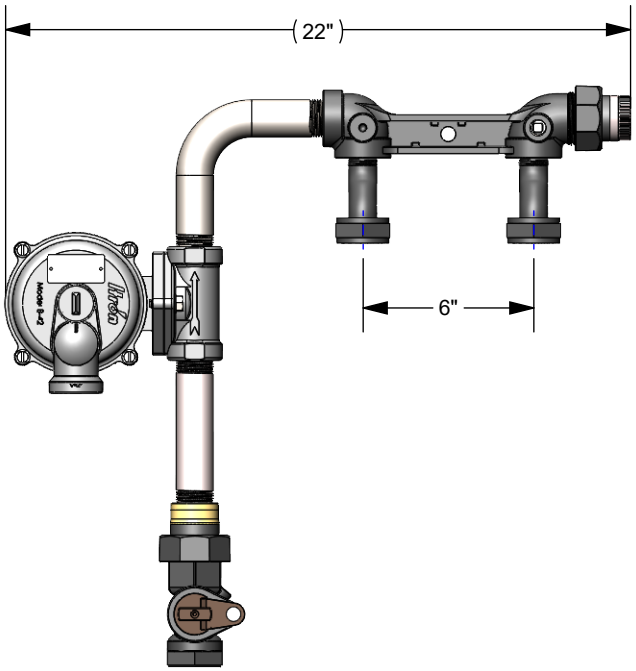

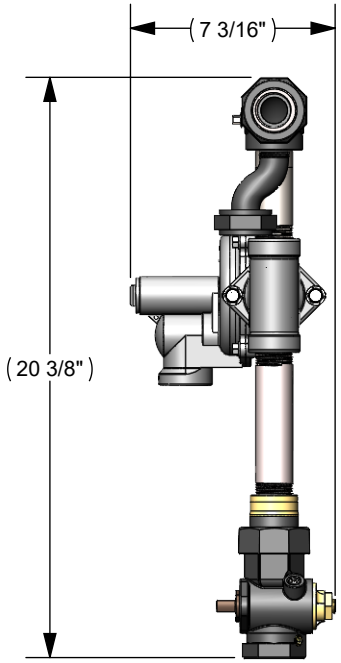

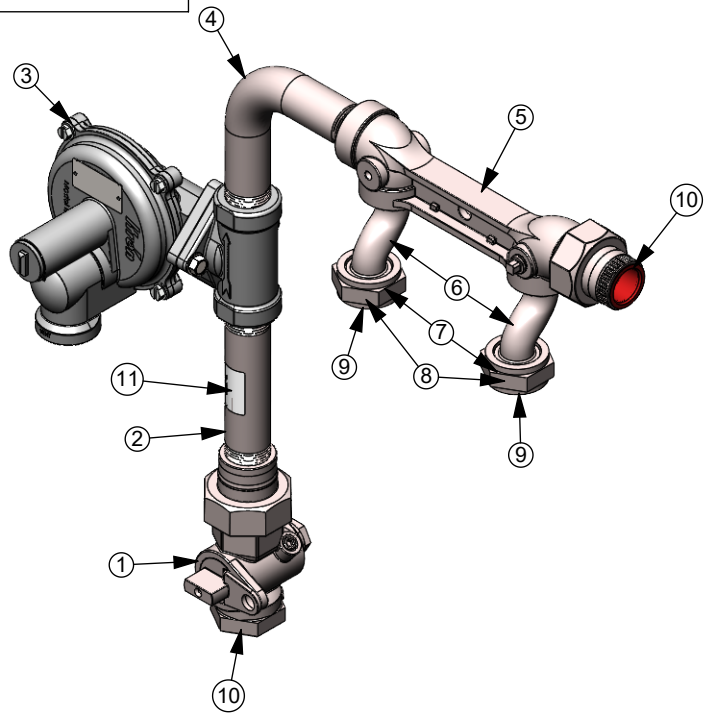

Rev	Change Description	Date
D03	Added customer pn to description.	08/30/2022
P02	Removed Belgas from description. Replaced Belgas reg w/ Itron reg as primary.	05/02/2022
P01	Initial release.	03/29/2022

UPSCO INC
PO Box 431 - 67 Central St
Moravia, NY 13118
P: 315.497.1070
F: 315.497.0223
WWW.UPSCOINC.COM

UPSCO #: UAMP-00010260 ()
Description: CG, # 0100-0704, MP-PF 1" ITRON
Customer: Corning Natural Gas, Corp (CG)

Drawing Type: Production
Product Type: Assembly - MP Prefab
Drawing Date: 2022-05-02
Drawing Rev. D03

Pipe Dope: Rector Seal Special #5
Test Pressure: 1 Min @ 90 PSI
Manometer: N/A
Page Number: 1 of 1

Primer: Alkyd, Blue
Paint: Alkyd, ASA #49 Grey
Packaging: 2 per Box / 20 Box per Pallet
Drawing Author: Anthony Fiorille

TOLERANCES
FRACTIONS 1/8" ANGLES 1
BREAK AND DEBURR ALL SHARP EDGES

Copyright 2021 ~ Utility Products Specialists Company Inc.
UPSCO Incorporated claims propriety rights to the materials disclosed herein. This material is disclosed in confidence and may not be reproduced or used to manufacture anything or referred to herein, without the direct written permission of UPSCO Incorporated. In consideration of the use of this drawing, user agrees that it shall be treated as confidential material, that it shall be returned upon request, and if the contents thereof shall not be disposed of directly or indirectly, nor shall it be used for any purpose other than forwhich it was specifically furnished, except by written permission of UPSCO Incorporated.