Engineering Change Request Form
(FRM-ENG-ECR-100)

INSTRUCTIONS ON FORM USE

This form is for use in the engineering change request process. To ensure that the engineering department has accurately captured and documented all required changes needed on the drawing(s), all departments are required to review the attached drawings. While reviewing, each department will be required to fill out their respective sections in Sharepoint.

DRAWING INFORMATION

UPSCO #: U70042 Revision: D03

Description: LP-PF, # 0100-0702, CORNING

Customer Name: Corning Natural Gas, Corp (CG) Customer Part Number: _____

Author: Anthony Fiorille

	PART #	OLD PART #	CATEGORY	TYPE	DESCRIPTION	QTY	COMMENT
1	UCVA-00001356	U02506	Component Part	Valve	1", H11179, 175# INS LW, 1/8" TEST PORT	1	
2	UFBD-00000387	U05006	Fabricated Part	Bend	1" S40 x 4 1/2" x 14", TBE	1	
3	UCMB-00002336	U03097	Component Part	Meter Bar	6610-FCE, 1" x 1" x 3/4" NPT, 1/4" PLUG	1	Alt: U03064
4	UCSW-00003577		Component Part	Swivel	3/4" NPT x 1A, BMI, Offset	2	
5	UCSN-00000900	U04023	Component Part	Swivel Nut	#1 Pitts, BMI	2	
6	UCGK-00000524	U04037	Component Part	Gasket	1A	2	
7	USCP-00000844	U08037	Shipping-Packaging Part	Caplug	BP-1-1/4, 1A Nut, INSIDE	2	
8	USCP-00000013	U08001	Shipping-Packaging Part	Caplug	T-14, 1" NPT, INSIDE	2	
9	USLB-00000922	U12090	Shipping-Packaging Part	Label	1 1/2" x 7/8", Fabrication Sticker	1	Apply After Paint
10	USLB-00003933	U01105	Shipping-Packaging Part	Label	4" x 5", Box Label	.250	1 Label per Box
11	USBX-00001545	U09010	Shipping-Packaging Part	Box	25 3/4" x 18 1/4" x 4 3/4", LP	.250	
12	USPL-00001353	U10011	Shipping-Packaging Part	Pallet	PNG 38" x 53"	.016	

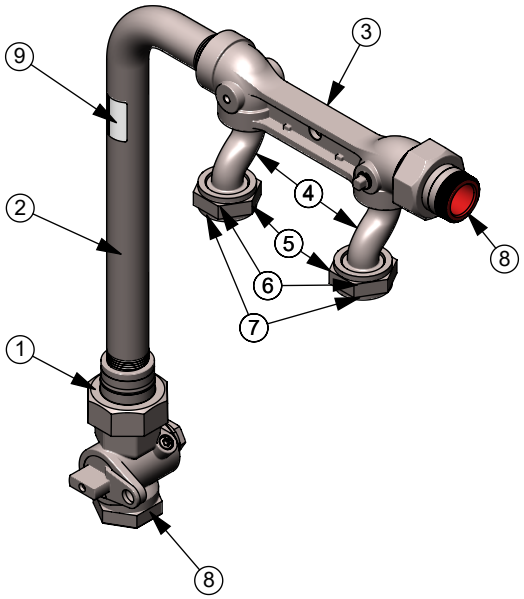

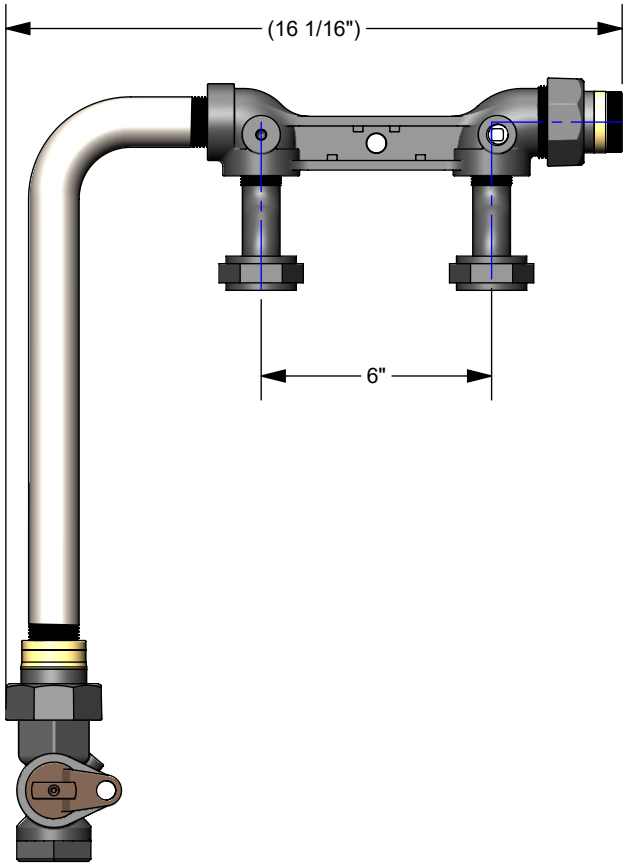

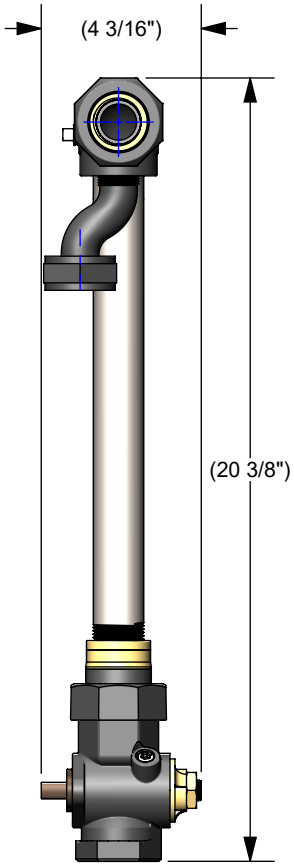

Rev	Change Description	Date
D03	Added customer pn to description.	8/30/2022
P02	Add U03064 as Alternate Meter Bar	2/20/2019

UPSCO INC
PO Box 431 - 67 Central St
Moravia, NY 13118
P: 315.497.1070
F: 315.497.0223
WWW.UPSCOINC.COM

UPSCO #: UALP-00001992 (U70042)
Description: LP-PF, # 0100-0702, CORNING
Customer: Corning Natural Gas, Corp (CG)

Drawing Type: Production
Product Type: Assembly - LP Prefab
Drawing Date: 2/20/2019
Drawing Rev. D03

Pipe Dope: Rector Seal Special #5
Test Pressure: 1 Minute @ 60 PSI
Manometer: N/A
Page Number: 1 of 1

Primer: Alkyd, Blue
Paint: Alkyd, ASA #49 Grey
Packaging: 4 per Box / 16 Box per Pallet
Drawing Author: Anthony Fiorille

TOLERANCES
FRACTIONS 1/8" ANGLES 1
BREAK AND DEBURR ALL SHARP EDGES

Copyright 2021 ~ Utility Products Specialists Company Inc.
UPSCO Incorporated claims propriety rights to the materials disclosed herein. This material is disclosed in confidence and may not be reproduced or used to manufacture anything or referred to herein, without the direct written permission of UPSCO Incorporated. In consideration of the use of this drawing, user agrees that it shall be treated as confidential material, that it shall be returned upon request, and if the contents thereof shall not be disposed of directly or indirectly, nor shall it be used for any purpose other than forwhich it was specifically furnished, except by written permission of UPSCO Incorporated.