Engineering Change Request Form
(FRM-ENG-ECR-100)

INSTRUCTIONS ON FORM USE

This form is for use in the engineering change request process. To ensure that the engineering department has accurately captured and documented all required changes needed on the drawing(s), all departments are required to review the attached drawings. While reviewing, each department will be required to fill out their respective sections in Sharepoint.

DRAWING INFORMATION

UPSCO #: _____ Revision: D07

Description: MP-PF, CNG, # 0100-0701, 3/4" 1/8" ORIFICE

Customer Name: _____ Customer Part Number: _____

Author: _____

	PART #	OLD PART #	CATEGORY	TYPE	DESCRIPTION	QTY	COMMENT
1	UCVA-00001585	U02054	Component Part	Valve	3/4" H11179171-250 INS LW	1	ALT: U02090
2	UCNP-00000026	U06007	Component Part	Nipple	3/4" S40 x 6", TBE	1	
3	UCRG-00001950	U01062	Component Part	Regulator	B42R - 3/4" NPT x 1" NPT, ORF: 1/8"	1	Alt: UCRG-00009796
4	UCBD-00002056	U05063	Component Part	Bend	1" S40 x 5" x 5", TBE, 2" R	1	ALT: UFBD-00002059
5	UCMB-00002336	U03097	Component Part	Meter Bar	6610-FCE, 1" x 1" x 3/4" NPT, 1/4" PLUG	1	ALT: U03064
6	UCSW-00003577		Component Part	Swivel	3/4" NPT x 1A, BMI, Offset	2	ALT: U04003
7	UCGK-00000524	U04037	Component Part	Gasket	1A	2	
8	UCSN-00000900	U04023	Component Part	Swivel Nut	#1 Pitts, BMI	2	
9	USCP-00000014	U08024	Shipping-Packaging Part	Caplug	T-12X/REUSER, 3/4" NPT, INSIDE	1	
10	USCP-00000844	U08037	Shipping-Packaging Part	Caplug	BP-1-1/4, 1A Nut, INSIDE	2	
11	USCP-00000013	U08001	Shipping-Packaging Part	Caplug	T-14, 1" NPT, INSIDE	1	
12	USLB-00000922	U12090	Shipping-Packaging Part	Label	1 1/2" x 7/8", Fabrication Sticker	1	Apply After Paint
13	USLB-00003933	U01105	Shipping-Packaging Part	Label	4" x 5", Box Label	.500	1 Label per Box
14	USBX-00001412	U09007	Shipping-Packaging Part	Box	24" x 20" x 6 5/8" , CONSOLID	.500	
15	USPL-00000367	U10014	Shipping-Packaging Part	Pallet	YRM-3, 4-Way, 40" x 48"	.025	

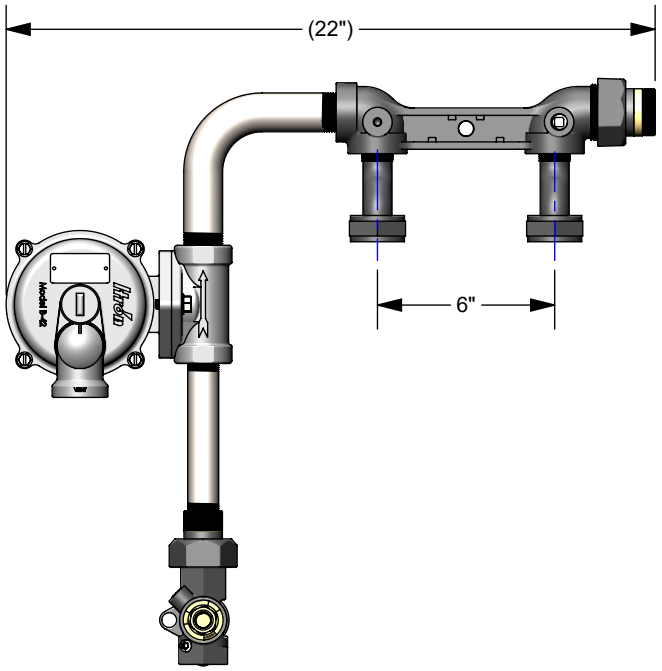

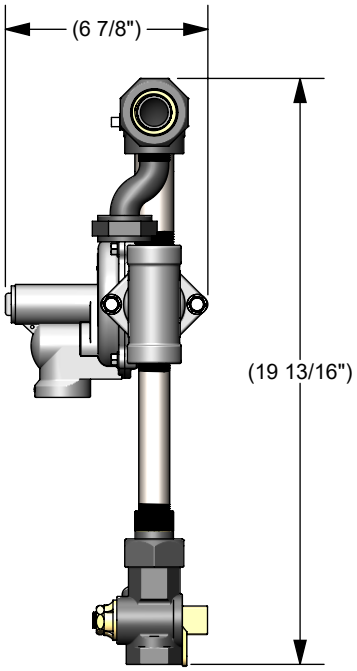

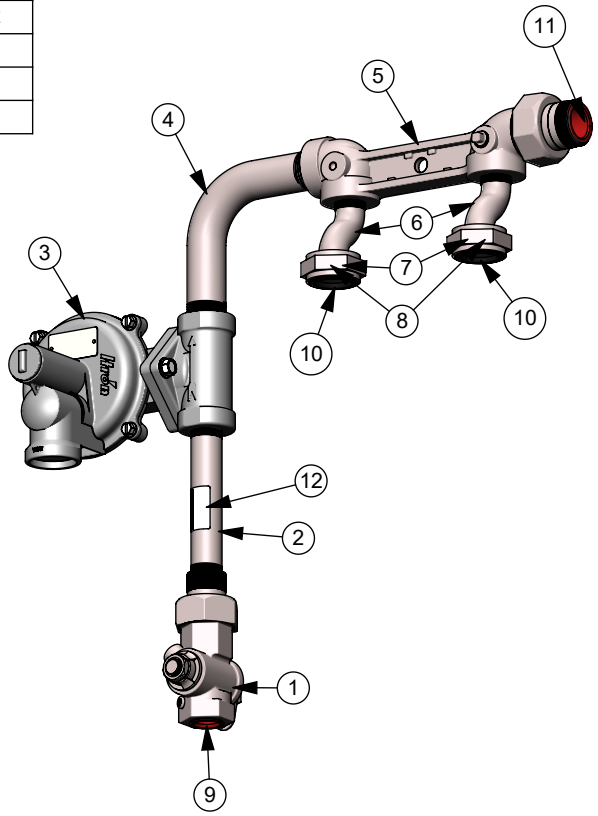

Rev	Change Description	Date
D07	Added customer pn to description.	8/30/2022
P06	Add Belgas as an alternate regulator.	7/2/2021
P05	Added U03064 as Alternate Meter Bar	02/20/2019

UPSCO INC
PO Box 431 - 67 Central St
Moravia, NY 13118
P: 315.497.1070
F: 315.497.0223
WWW.UPSCOINC.COM

UPSCO #: UAMP-00001991 (U70041)
Description: MP-PF, CNG, # 0100-0701, 3/4" 1/8" ORIFICE
Customer: Corning Natural Gas, Corp (CG)

Drawing Type: Production
Product Type: Assembly - MP Prefab
Drawing Date: 07/02/2021
Drawing Rev. D07

Pipe Dope: Rector Seal Special #5
Test Pressure: 1 Min @ 90 PSI
Manometer: N/A
Page Number: 1 of 1

Primer: Alkyd, Blue
Paint: Alkyd, ASA #49 Grey
Packaging: 2 per Box / 20 Box per
Drawing Author: Anthony Fiorille

TOLERANCES
FRACTIONS 1/8" ANGLES 1
BREAK AND DEBURR ALL SHARP EDGES

Copyright 2021 ~ Utility Products Specialists Company Inc.
UPSCO Incorporated claims propriety rights to the materials disclosed herein. This material is disclosed in confidence and may not be reproduced or used to manufacture anything or referred to herein, without the direct written permission of UPSCO Incorporated. In consideration of the use of this drawing, user agrees that it shall be treated as confidential material, that it shall be returned upon request, and if the contents thereof shall not be disposed of directly or indirectly, nor shall it be used for any purpose other than forwhich it was specifically furnished, except by written permission of UPSCO Incorporated.