Engineering Change Request Form
(FRM-ENG-ECR-100)

INSTRUCTIONS ON FORM USE

This form is for use in the engineering change request process. To ensure that the engineering department has accurately captured and documented all required changes needed on the drawing(s), all departments are required to review the attached drawings. While reviewing, each department will be required to fill out their respective sections in Sharepoint.

DRAWING INFORMATION

UPSCO #: U70044 Revision: D05

Description: RMCB-2, CNG, # 0100-0821, 1A

Customer Name: Corning Natural Gas, Corp (CG) Customer Part Number: _____

Author: Anthony Fiorille

	PART #	OLD PART #	CATEGORY	TYPE	DESCRIPTION	QTY	COMMENT
1	UCVA-00001585	U02054	Component Part	Valve	3/4" H11179171-250 INS LW	1	
2	UCNP-00000026	U06007	Component Part	Nipple	3/4" S40 x 6", TBE, A53	1	
3	UCRG-00001950	U01062	Component Part	Regulator	B42R - 3/4" NPT x 1" NPT, ORF: 1/8"	1	
4	UCNP-00000035	U06017	Component Part	Nipple	1" S40 x 5", TBE	1	
5	UCEL-00000639	U07066	Component Part	Elbow	1 1/2" x 1", NPT, BMI	1	
6	UWHD-00001302	U70043SA	Weldment	Header	MCB-2, 1 1/2" S40 x 32"	1	
7	UCMB-00001235	U03465	Component Part	Meter Bar	6712LFCA 1" x 1" x 3/4", RC In, V Out, 6" CL	2	
8	UCSW-00003577		Component Part	Swivel	3/4" NPT x 1A, BMI, Offset	4	ALT: U04003
9	UCSN-00000900	U04023	Component Part	Swivel Nut	#1 Pitts, BMI	4	
10	UCGK-00000524	U04037	Component Part	Gasket	1A	4	
11	UCPG-00000834	U08020	Component Part	Plug	1A, BMI	2	
12	UCCA-00000610	U07014	Component Part	Cap	1 1/2" NPT, BMI	1	
13	USCP-00000844	U08037	Shipping-Packaging Part	Caplug	BP-1-1/4, 1A Nut, INSIDE	2	
14	USCP-00000013	U08001	Shipping-Packaging Part	Caplug	T-14, 1" NPT, INSIDE	2	
15	USCP-00000014	U08024	Shipping-Packaging Part	Caplug	T-12X/REUSER, 3/4" NPT, INSIDE	1	
16	USLB-00000922	U12090	Shipping-Packaging Part	Label	1 1/2" x 7/8", Fabrication Sticker	1	Apply After Paint
17	USLB-00003933	U01105	Shipping-Packaging Part	Label	4" x 5", Box Label	.063	
18	USLI-00000932	U09041	Shipping-Packaging Part	Liner	Flange Tube - 48" x 40" x 31"	.063	
19	USIN-00000933	U09052	Shipping-Packaging Part	Insert	For Flange Tube Liner	.250	
20	USPL-00000367	U10014	Shipping-Packaging Part	Pallet	YRM-3, 4-Way, 40" x 48"	.063	

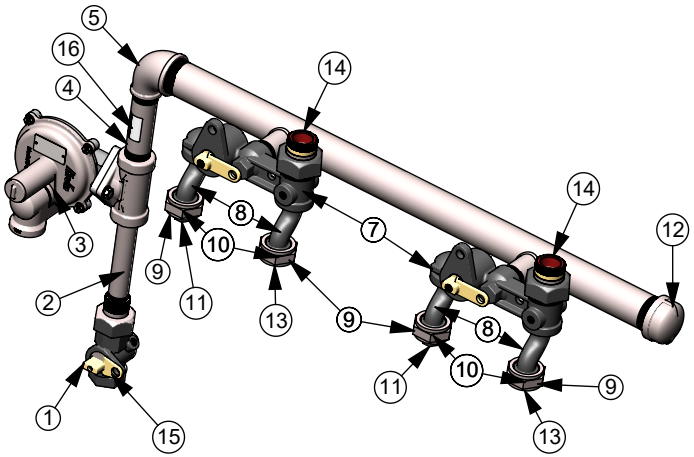

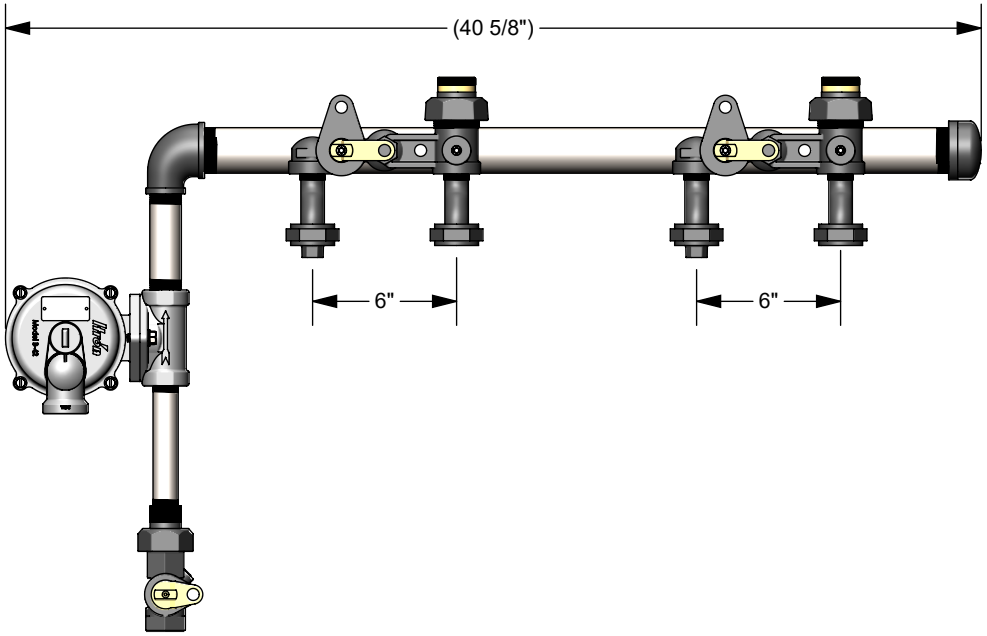

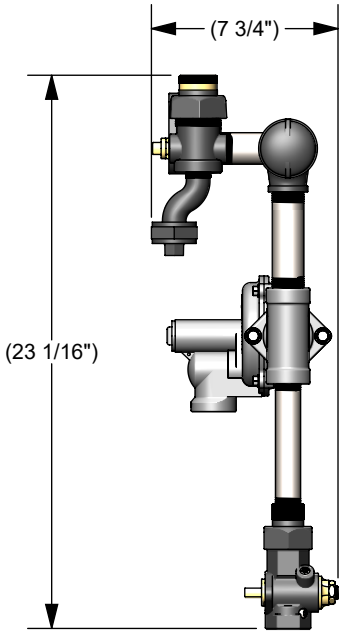

Rev	Change Description	Date
D05	Added customer pn to description.	8/30/2022
P04	Added Alt Swivel U04003	1/29/2019

UPSCO INC
PO Box 431 - 67 Central St
Moravia, NY 13118
P: 315.497.1070
F: 315.497.0223
WWW.UPSCOINC.COM
Taking Innovation Underground

UPSCO #: UAMB-00002006 (U70044)
Description: RMCB-2, CNG, # 0100-0821, 1A
Customer: Corning Natural Gas, Corp (CG)

Drawing Type: Production
Product Type: Assembly - MCB
Drawing Date: 1/29/2019
Drawing Rev. D05

Pipe Dope: Rector Seal Special #5
Test Pressure: 1 Minute @ 90 PSI
Manometer: N/A
Page Number: 1 of 1

Primer: Alkyd, Blue
Paint: Alkyd, ASA #49 Grey
Packaging: 16 per Tote / 1 Tote per
Drawing Author: Anthony Fiorille

TOLERANCES
FRACTIONS 1/8" ANGLES 1
BREAK AND DEBURR ALL SHARP EDGES

Copyright 2021 ~ Utility Products Specialists Company Inc.
UPSCO Incorporated claims propriety rights to the materials disclosed herein. This material is disclosed in confidence and may not be reproduced or used to manufacture anything or referred to herein, without the direct written permission of UPSCO Incorporated. In consideration of the use of this drawing, user agrees that it shall be treated as confidential material, that it shall be returned upon request, and if the contents thereof shall not be disposed of directly or indirectly, nor shall it be used for any purpose other than forwhich it was specifically furnished, except by written permission of UPSCO Incorporated.