NOTES:
1. DIMENSIONS ARE FOR REFERENCE ONLY.
2. INSERT A REFERS TO MCMASTER PART 94510A411
3. INSERT C REFERS TO MCMASTER PART 94510A612
4. ALL INSERTS ARE INSERTED INTO THE FACES SHOWN (SCREWS ENTER FROM THIS SIDE)

REVISIONS

REV	DESCRIPTION	DATE	PREPARER	REVIEWER
00	INITIAL REVISTION	13-FEB-2025	SD	
01	FIXED INSERT LOCATIONS, ADDDED MAGNETS	21-MAR-2025	SD	

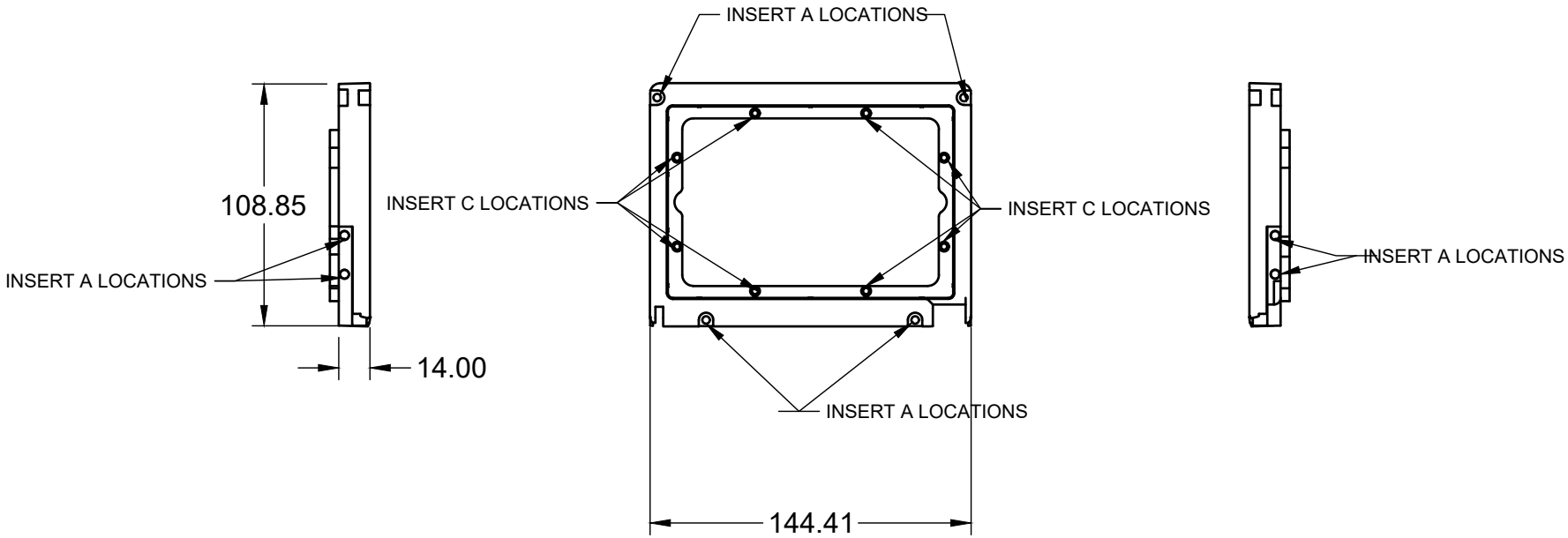

cerillo
illuminate possibility

PROPRIETARY AND CONFIDENTIAL

THE INFORMATION CONTAINED IN THIS DRAWING IS THE SOLE PROPERTY OF CERILLO, INC. ANY REPRODUCTION IN PART OR AS A WHOLE WITHOUT THE EXPRESSED WRITTEN CONSENT OF CERILLO, INC. IS PROHIBITED.

DIMENSIONS ARE IN:
MM (METRIC)

PRECISION:

ANGULAR:	MACH ±1° BEND ±3°
X.	±1.0
X.XX	±0.25
X.XXX	±0.025

MATERIAL
NYLON PA12

FINISH
DYED BLACK

CERILLO, INC. 434.218.3151
107 EAST WATER STREET
CHARLOTTESVILLE, VA 22902 WWW.CERILLO.BIO

TITLE
Cirrus Emitter Holder

PART NO.
RD0208CR

REV
01

SIZE A | SCALE 1:3 | SHEET 1/1