NOTES:
1. DIMENSIONS ARE FOR REFERENCE ONLY.
2. INSERT A REFERS TO MCMASTER PART 94510A411
3. ALL INSERTS INSERTED INTO THE FACE SHOWN (SCREWS ENTER FROM THIS SIDE)

REVISIONS

REV	DESCRIPTION	DATE	PREPARER	REVIEWER
00	INITIAL REVISION	13-FEB-2025	SD	
01	UPDATED FOR POWER SUPPLY	19-FEB-2025	SD	
02	UPDATED FOR ALIGNMENT	24-MAR-2025	SD	

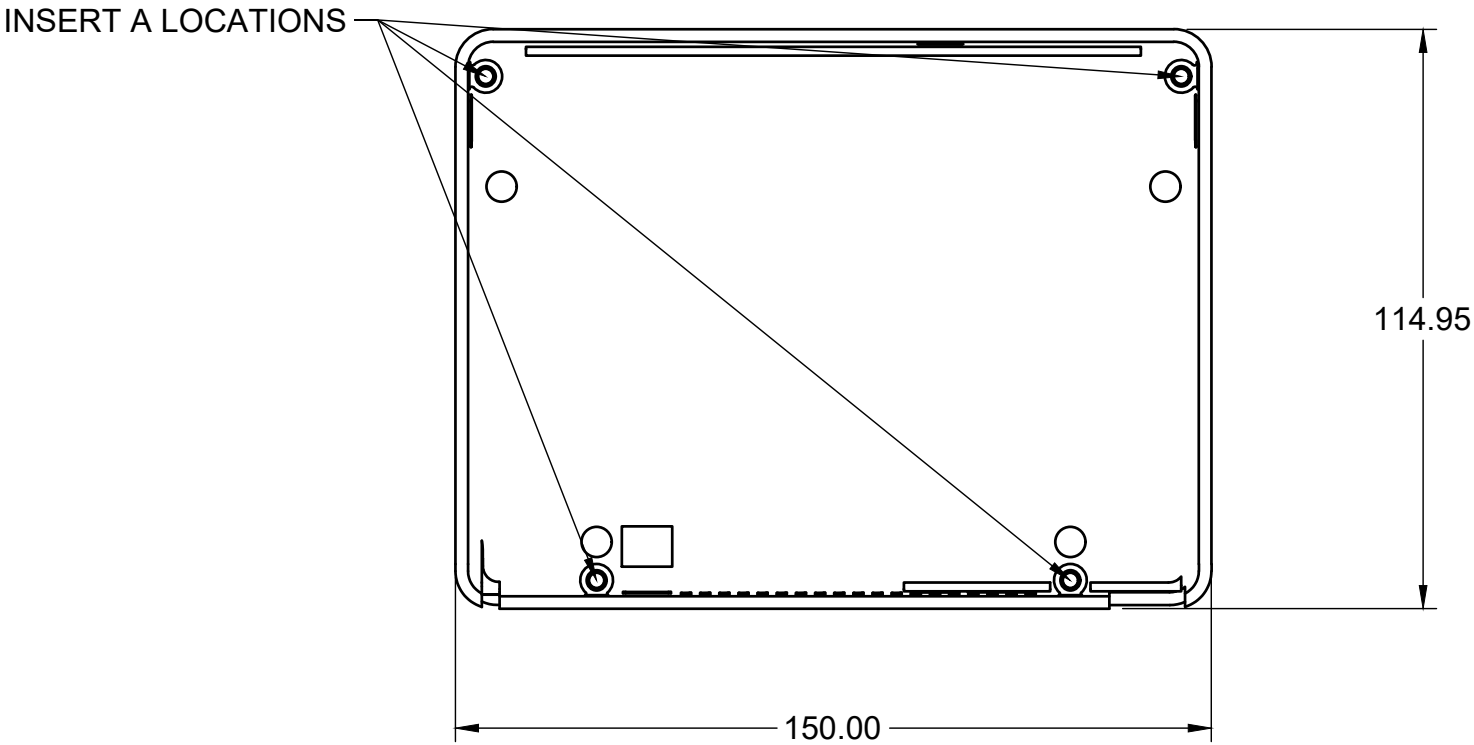

cerillo
illuminate possibility

PROPRIETARY AND CONFIDENTIAL

THE INFORMATION CONTAINED IN THIS DRAWING IS THE SOLE PROPERTY OF CERILLO, INC. ANY REPRODUCTION IN PART OR AS A WHOLE WITHOUT THE EXPRESSED WRITTEN CONSENT OF CERILLO, INC. IS PROHIBITED.

DIMENSIONS ARE IN:
MM (METRIC)

PRECISION:

ANGULAR:	MACH ±1° BEND ±3°
X.	±1.0
X.XX	±0.25
X.XXX	±0.025

MATERIAL
NYLON PA12

FINISH
DYED BLACK

CERILLO, INC. 434.218.3151
107 EAST WATER STREET
CHARLOTTESVILLE, VA 22902 WWW.CERILLO.BIO

TITLE
Cirrus Bottom Case

PART NO.
RD0206CR

REV
02

SIZE A | SCALE 1:1.5 | SHEET 1/1